Installation with own floor

Anchoring soft surface

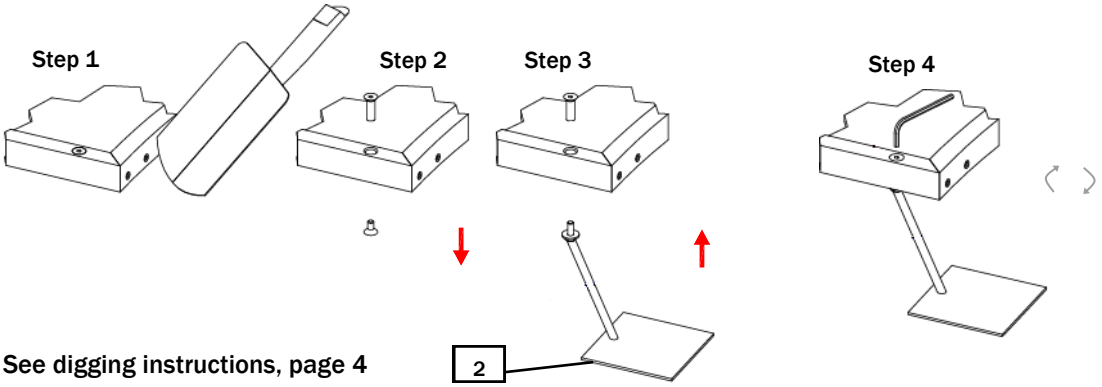

See digging instructions, page 4

Anchoring on hard surface: tarmac

Anchoring on tarmac with chemical anchoring and threaded rod (NOT provided)

Use drill instructions from your che-

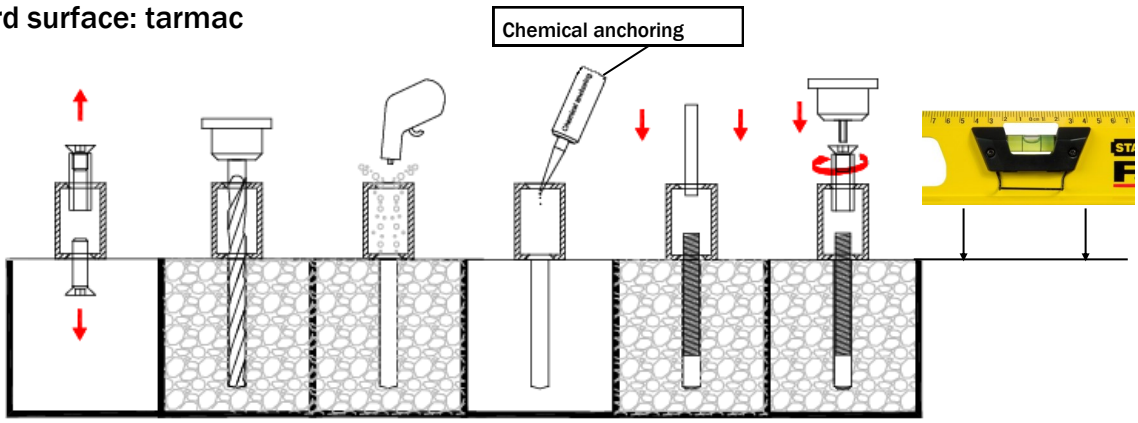

Anchoring on hard surface: concrete

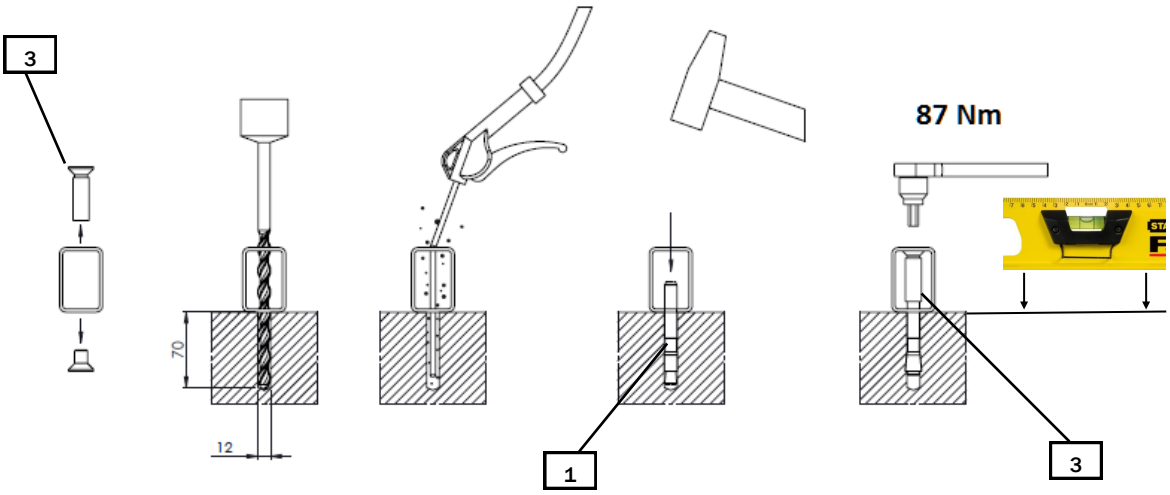

When 3 or more floor parts are connected, anchoring in the ground is NOT necessary

Pos.nr.	Part description	Dimension
01	Fixing anchor (provided)	M12 x 100
02	Std. Anchor plate (provided)	M12
03	Hexagon socket screw (provided)	M12